Product Information Sheet

WECO 930HFL TERMINAL CONNECTORS, 3-POLE CABLE

43-494 WECO 930HFL Terminal connectors, 3-pole cable

DESCRIPTION

These products were created for the broadcasting and video production industries but can be used in all applications where a small wire gauge is needed. Series 930-HFL features a handle to simplify vertical in-line insertion and removal and is designed to provide strain relief for the terminated wires.

Self-locking snap-in feature when used with the 931-HSL and 930-HSL headers.

The plug and header are designed to prevent accidental separation of the two parts.

Horizontal and vertical plug-in versions are available, both versions feature 3 poles and 3.5 mm centre to centre spacing.

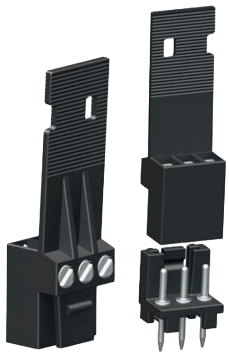

TECHNICAL SPECIFICATION

Centre to Centre Spacing:	3.500 mm (0.138 in)	**Comparative Tracking Index:**	CTI ≥ 600 V
Nominal Cross Section:	0.75 mm2 (1162.5 mils^2)	**Oxygen Index Rating:**	31 %
Wire Stripping Length:	5.000 mm (0.197 in)	**Terminal Body:**	Nickel plated copper alloy
Moulding:	Polyamide, Self extinguishing UL 94, V-0		Nickel silver
Colour:	Grey	**Contact Spring:**	Tin plated copper alloy
Temperature limits:	Short Time : 200°C (392°F)	**Screw:**	Slotted head, zinc plated blue passivated, steel substrate M2
Continuous:	105°C (221°F)		
Low Limit:	-40°C (-40°F)		
Ambient Temp. Range (°C):	0°C to 0°C		

Approval Information

UL File No. E69841 | CSA File No. LR24322

	TYPE (Spacing)	Current (A)	Voltage (V)	Application Group	AWG	Screw Tightening Torque
	930-HFL (-DS) 3.5 mm	6	300	B	28-18	2.0 lbfin
	930-HFL (-DS) 3.5 mm	6	300	B	28-18	0.2 Nm

DS version is UL and CSA certified for 28-20 AWG.

International Approval Information

Rated Impulse Withstand Voltage : 2500 V

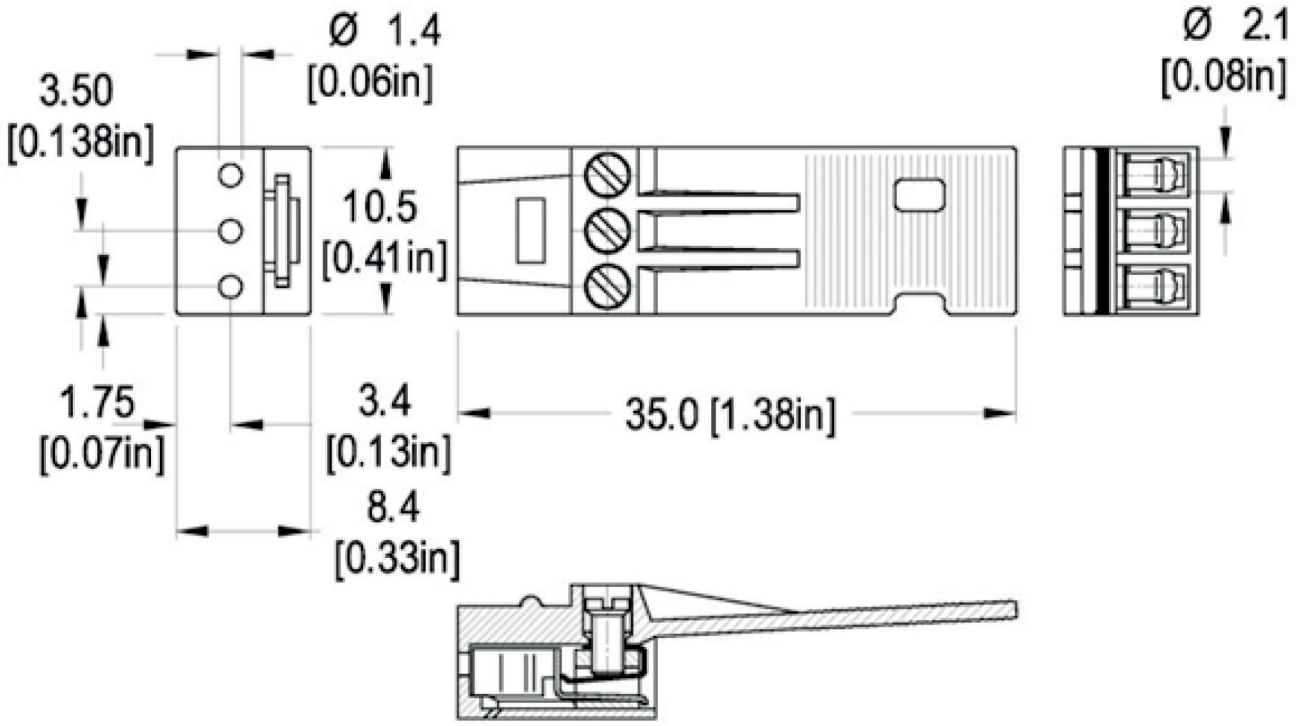
Ø 1.4
[0.06in]
Ø 2.1
[0.08in]
3.50
[0.138in]
10.5
[0.41in]
1.75
[0.07in]
3.4
[0.13in]
35.0 [1.38in]
8.4
[0.33in]