Product Information Sheet

NEUTRIK RBR-CAP-CABLE-BNC

48-6339 NEUTRIK RBR-CAP-CABLE-BNC Rubber cap for BNC cable connectors

DESCRIPTION

Black rubber dust cap complete with lanyard suitable for cable mount BNC plugs.



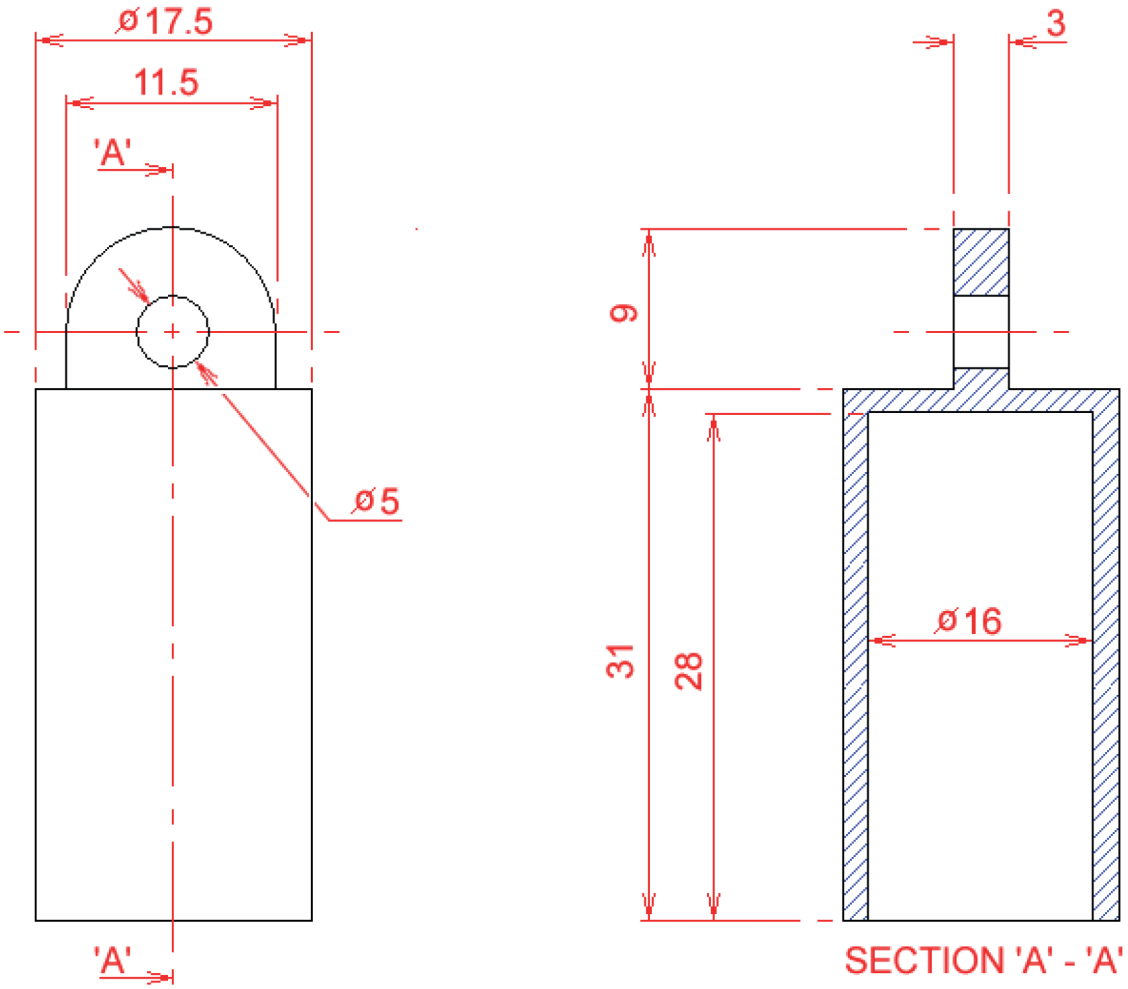

NTS
All Dims Approx.
All Dims mm