258 Table Microphone Clamp

25800-300-55 black

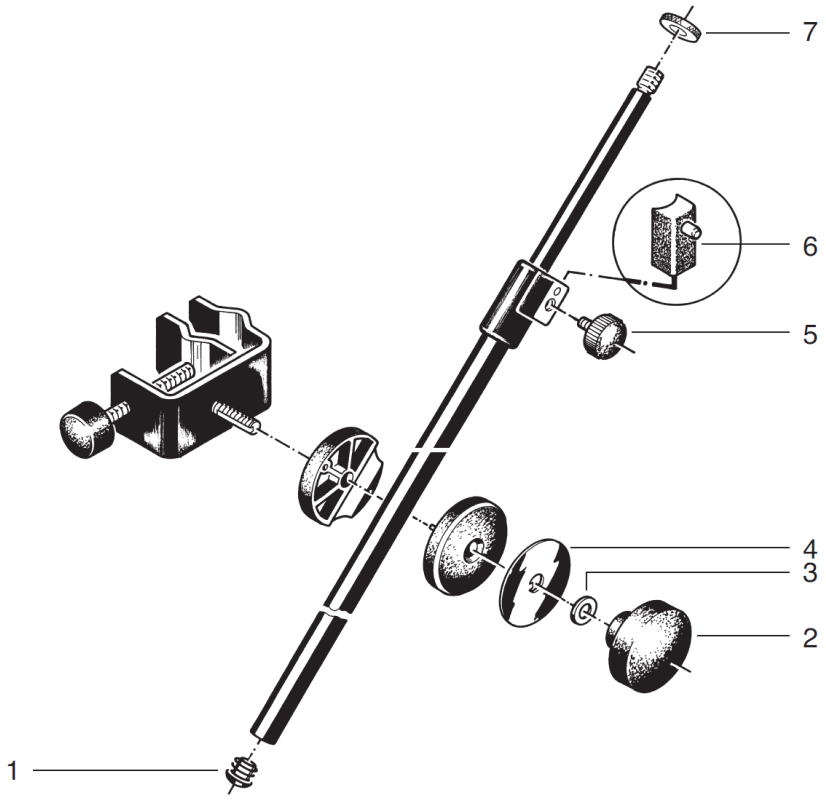

Please email enquiries@canford.co.uk for a quotation on items listed as POA.

Drawing position	Description	K&M Article no. Black	Canford Order code
1	Plastic end-cap	03-20-620-55	POA
2	locking knob M8	01-82-552-55	POA
3	washer ø 8,4 mm	03-11-520-29	53-871
4	washer with snug	01-42-520-55	POA
5	knurled knob M6 x 16 mm	01-82-833-55	53-799
6	plastic locking spacer	01-86-620-55	POA
7	aluminium threaded washer 3/8“	03-31-525-00	53-770